CORRIGENDUM-1

Date: 19.09.2022

Sub: Corrigendum for Signaling outdoor and indoor works with Distributed Electronic interlocking (EI) at Yesvantpur Jn. in connection with doubling of Yesvantpur-Channasandra section of Bangalore Division

In the above Tender Notice No. **K-RIDE/DL/S&T/13/2022; Date:- 07.09.2022**, few discrepancies were noticed and the same is required to be corrected. The details are given below:

Sl. No	Description	As published	Revised
1	Section 2 ITT: Eligibility Criteria Matrix/Table 3.9	Clause:3.2. (a) (Annual construction turnover in at least two out of five financial years)	Clause: 3.2 (a) (Minimum average annual construction turnover)
2	Section 11 Drawings	----------	Tentative signalling plan and SM Room VDU table

GM/S&T

YESVANTAPUR Jn.

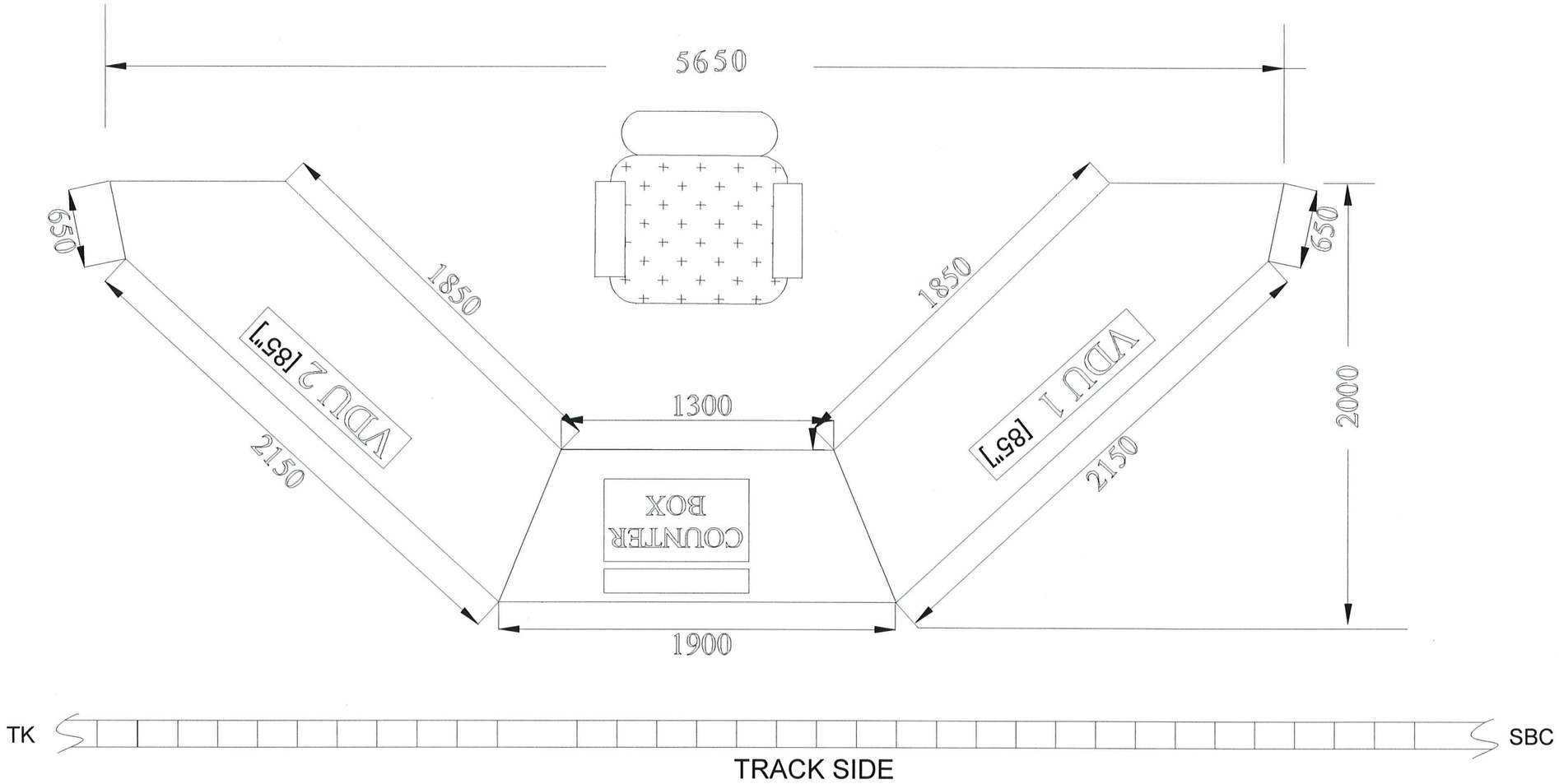

NOTE: 1) ALL DIMENSIONS ARE IN MM

2) Refer the tender document for details

K-RIDE	Rail Infrastructure Development Company (Karnataka) Limited
DRAWN	(NAVESH .M)
Sr.DGM/S&T	(A.R.CHANDRASHEKAR)
GM/S&T	(S.NAGESWARA RAO)

Tentative sketch

Sketch may change based on Approval

S.W.R
YESVANTPUR Jn (STAGE-III)
RULE DIAGRAM
CLASS'B' STANDARD-III
(NOT TO SCALE)
(SHEET-2 OF 2)

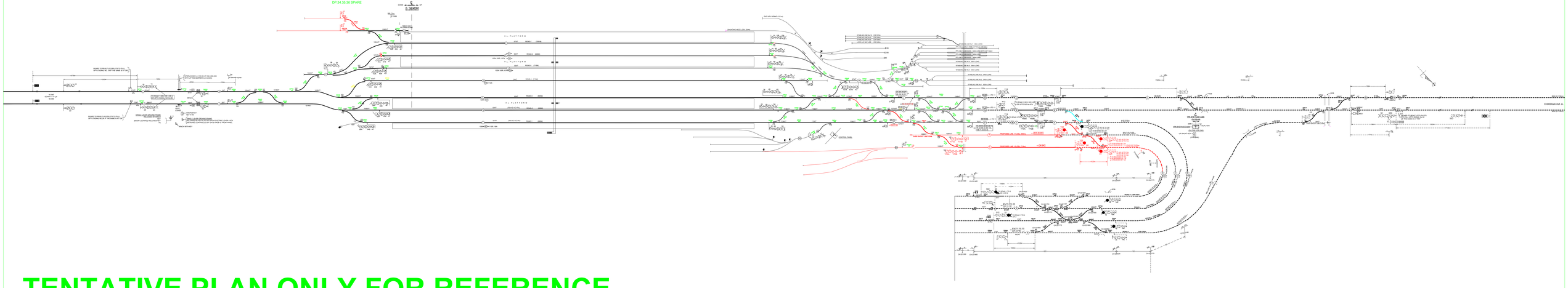

TENTATIVE PLAN ONLY FOR REFERENCE